Solar Powered Smart Street Lamp

Author: Ameer Hamza Khan
Date: February 3, 2017

Introduction

This application note describes the design of a solar powered smart street lamp using Silego's GreenPAK CMIC. Street lamps are important because they illuminate humans, animals and obstructions that lie outside the coverage of car headlights. A solar powered street lamp is novel because it can be off-grid and still functioning in case of power outages. It also leaves power to be available for other purposes. It automatically illuminates when needed, and the resulting power savings earn it a "smart" designation.

Design Description

For this project Silego's GreenPAK SLG46140V CMIC (Configurable Mixed Signal Integrated Circuit) has been used. With that, the three key features designed in are:

1- Motion Sensing

2- Daylight Presence Sensing

3- Battery Level Sensing

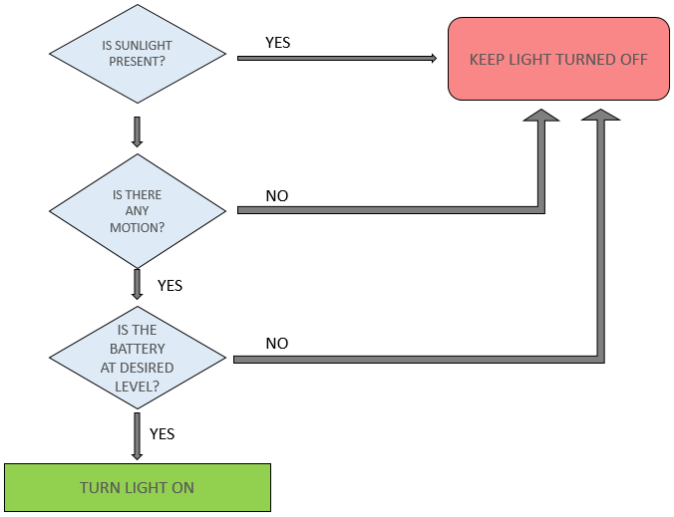

Figure 1. Flow Chart Describing Design

Motion Sensing

For power savings, the light is only allowed to turn when it detects presence of any moving body. To accomplish this, a Passive Infra-Red (PIR) Sensor has been designed in. This PIR Motion sensor has a single output pin along with pins for VCC and GND. A PIR sensor basically detects levels of Infrared Radiation. As soon as it detects a change in the levels of radiation, it sends out a signal notifying of the change. This sensor is one of the most commonly used for the purpose of motion detection. (see Fig. 2)

Figure 2. PIR Motion Sensor

Ambient Daylight Sensing

The solar panel itself is used to sense ambient light. A solar panel gives full output in full direct sunlight, and zero output with no light. These conditions can then be converted to produce appropriate levels to a digital input pin of the CMIC. By using a simple voltage divider circuit, the 18 volts generated by the solar panel can be converted to become a 3.3V signal that will represent a High-Level logic input for the SLG46140V CMIC.

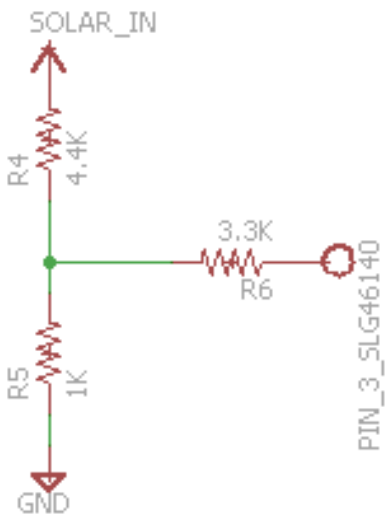

Figure 3. Converting higher voltages to lower CMIC acceptable Digital Signal

Battery Level Monitoring and Charging

Battery level monitoring is also an important aspect of this system. In this design a Sealed Lead-Acid (SLA) Battery has been used. SLA Batteries are very versatile, dependable and cost-effective batteries. Charging methods of SLA Batteries are much simpler compared to batteries with other chemistry. SLA batteries need to be charged at a constant current equal to 0.1C (here C = the capacity of a battery at fully charged scale, Ampere-hour) and a voltage of around 1.5Volts to 2 Volts higher than the rated output voltage. Because of this, the charging circuitry can also be simpler.

It is important to note that at full capacity a 12v SLA battery will give an open circuit voltage of around 13.2 volts. When discharged, the battery gives an open circuit voltage measuring a little less than 12v.

But since our CMIC cannot measure such high voltages, these need to be converted down to acceptable ranges.

Again a simple voltage divider is employed to divide down the voltages to around 800mv to represent a discharged battery and around 1150mv to represent a completely charged battery.

These voltage levels are then fed into the SLG46140V CMIC and compared using its Analog Comparators. As we will see in the next section, these comparators play a vital role in the overall project realization.

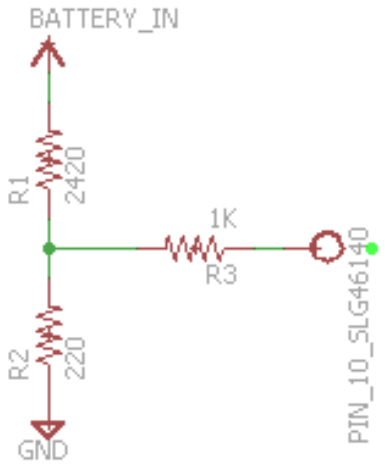

Figure 4. Battery Level Converter

GreenPAK CMIC Design Description

The GreenPAK schematic to implement this design is shown in Fig. 5.

- **Description of Pins Used:**

- *PIN3:* Digital Input pin for detection of presence of ambient light.

- *PIN4:* Digital Input pin for detection of presence of motion or an object.

- *PIN10:* Analog Input Pin for battery level monitoring.

- *PIN12:* Digital Output with 1xPush-Pull Output Mode for controlling the LED.

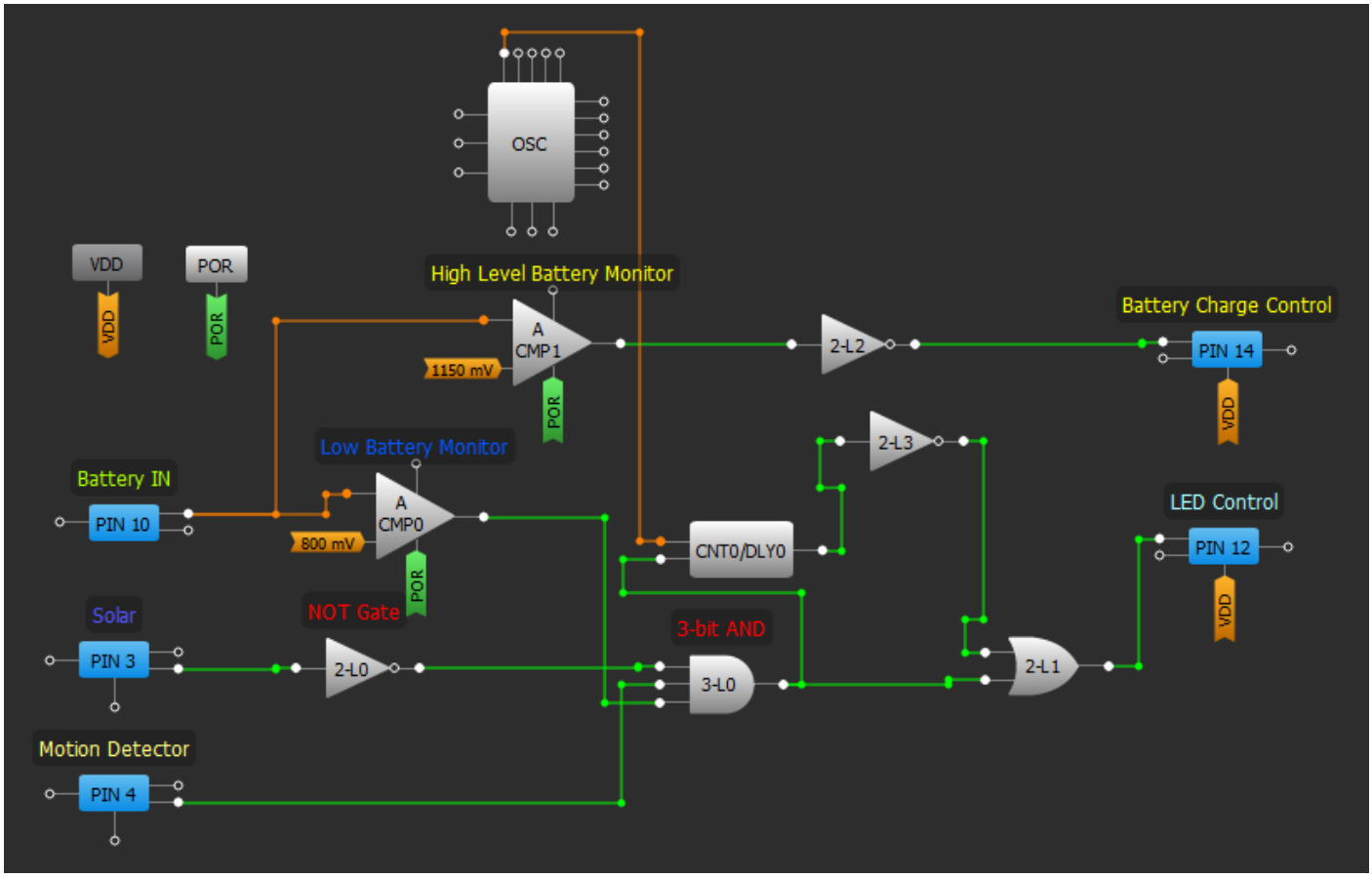

Figure 5. GreenPAK CMIC Design

- *PIN14:* Digital Output with 1xPush-Pull Output Mode for controlling the charge flow into the battery.

- **3 – Bit AND Gate:**

The 3-bit AND Gate in this design ensures the light is turned ON only when all the conditions are met. Conditions such as *Detection of Motion in the vicinity, Ambient Sunlight presence* & *Desired Battery Level* are the three bits that determine the output of the AND Gate.

Sunlight	Motion	Battery Level (1 when $V_{battery}$ => 12V)	Output
0	0	0	0
0	0	1	0
0	1	0	0
0	1	1	0
1	1	1	1

Table 1. 3-Bit AND Gate Truth Table (shortened)

- **Battery Level Monitoring:**

Two analog comparators (ACMP0 and ACMP1) monitor the battery voltage. As described earlier, two voltage levels of 800mV and 1150mV have been used to determine the state of the battery. If the measured battery voltage drops to 800mV or less, the comparator (ACMP0) gives an output of zero. This output is fed into the 3-input AND Gate which in turn gives an output of zero as well turning the light OFF on detection of a low battery voltage level.

The High Level voltage is measured during charging and the divided down voltage taken as input to Pin10 of the CMIC is fed into the comparator (ACMP1). As soon the voltage level reaches or exceeds the reference voltage set on the inverting input (1150mV in this case), the comparator outputs a high. As soon as our desired level is reached we need to cutoff battery charging, hence a Low-level Output is required and a simple Inverter is employed for this purpose.

- **Input from the Solar Cell:**

As described earlier, when there is no ambient light present, the solar cell gives an output of zero/Digital-Low signal. Since absence of sunlight is one of the conditions for turning our Street Lamp ON, we need to convert it into a Digital-High so that our AND Gate also outputs a HIGH. Hence, an Inverter is used here as well for that purpose.

- **Usage of Counter as means of extending Output Period:**

In the above design a Counter(CNT0/DLY0) is also used to produce a certain amount of delay in turning off the signal at PIN12 of the CMIC. This creates a desired delay that avoids rapid output switching. (see Fig. 6)

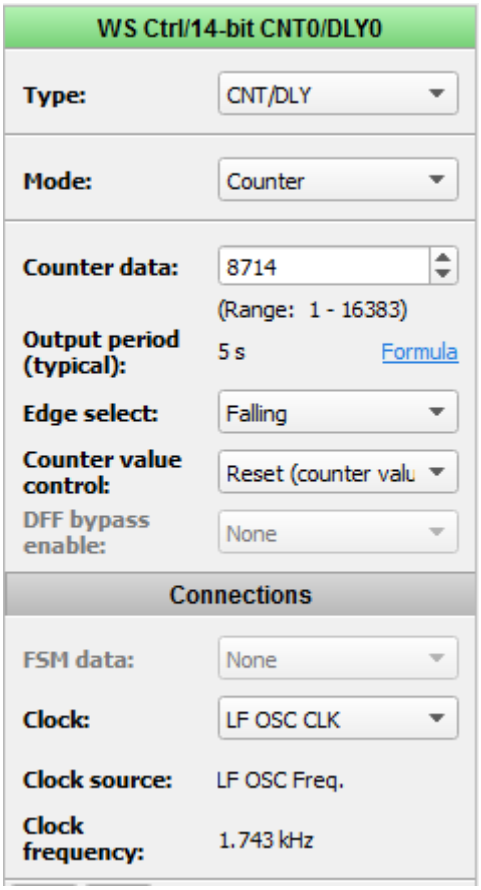

Figure 6. Counter Data

Description of External Circuits

This section describes the use of external circuitry that was needed to drive larger loads such as the 10W LED lamp, and the battery charging. To create the most efficient and energy saving circuits, MOSFETs have been used as opposed to normal BJTs. This results in faster switching time as well improved/reduced power consumption.

- **Battery Charging Control:**

An IRLZ44N HEXFET POWER MOSFET(similar MOSFETs such as FQP30N06L can also be used) has been used which is an N-channel Enhancement Type MOSFET.

This MOSFET is specifically designed to operate with gate voltage levels (3V and 5V) that can be easily generated by small controllers and integrated circuits.

The datasheet of the MOSFET describes Threshold Gate to Source Voltage ($V_{gs(th)}$) of around 3 volts for a Drain Current I_D of around 1 Amperes. This can be easily achieved by our small CMIC according to the electrical specification table for Pin 12 (similar to PIN14).

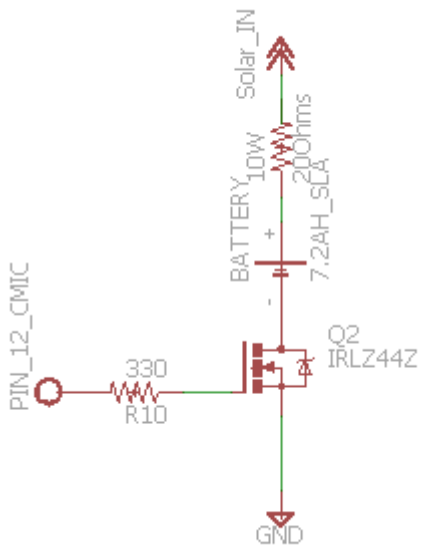

Figure 7. Battery Charge Control

- **LED Lamp Control:**

Similar to the charging control circuit, this part of our project also uses a IRLZ44N HEXFET MOSFET for switching a 10 Watt LED which is the main source of illumination. Since we want to control a 10Watt LED with a 12V battery, we need to be able to supply a current of approx. 0.8 Amp. The circuit is shown in figure 8.

Application Examples of this Design:

This application note describes the basic design that can be used to power any type of light efficiently and hassle free using solar power and a battery. This design can be scaled to larger power lights such as lighting used for infrastructure illumination to very small lights such as the ones used to beautify and illuminate paths, landscapes and horticulture as well. The design of the GreenPAK will remain similar for all of these applications.

PIN 14

Electrical Specifications

	1.8 V min/max	3.3 V min/max	5.0 V min/max
V_OH (V)	1.670/-	2.722/-	4.168/-
V_OL (V)	-/0.020	-/0.280	-/0.330
I_OH (mA)	1.053/-	5.770/-	20.716/-
I_OL (mA)	0.760/-	4.060/-	6.010/-
-	-/-	-/-	-/-
-	-/-	-/-	-/-

Table 2. Electrical Specifications at PIN14

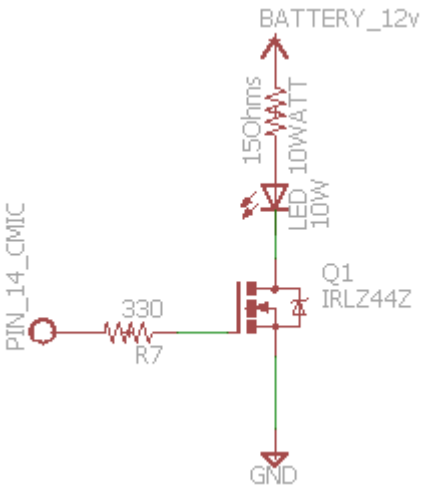

Figure 8. Schematic for controlling 10W LED

Application Examples of this Design

This application note describes the basic design that can be used to power any type of light efficiently and hassle free using solar power and a battery. This design can be scaled to larger power lights such as lighting used for infrastructure illumination to very small lights such as the ones used to beautify and illuminate paths, landscapes and horticulture as well. The design of the GreenPAK will remain similar for all of these applications.

Conclusion

In this application note, design of a smart street lamp was proposed using the SLG46140V GreenPAK CMIC as the main controlling element. The small sized IC proved to be immensely capable at performing the task at hand while also minimizing power consumption. The provision of proper design tools also aided very effectively in the process of realization of this project. This project can also be enhanced by introducing other circuitry such as detection of dust on the Solar Panel, or an external over-ride switch to latch the LED output.

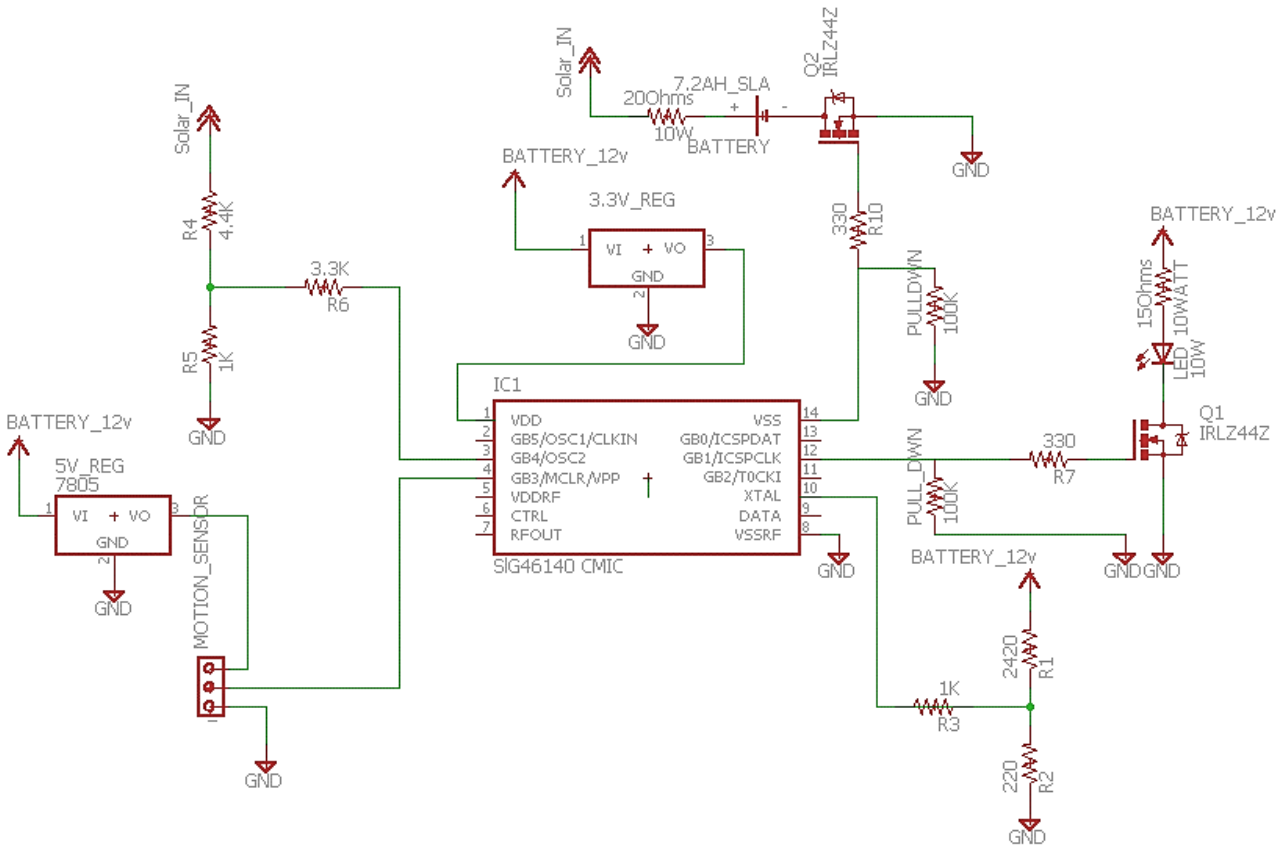

Figure 9. Top Level Schematic

About the Author

Name: Ameer Hamza Khan

Background: Ameer Hamza Khan received his Bachelor's Degree in Electronic Engineering in 2015. He has experience with different programming languages used to program ICs such as Assembly, MATLAB, JAVA and Python etcetera. Currently he is enrolled in a Post-Graduation Program for the Degree of Mechatronics Engineering.

Contact: **appnotes@silego.com**

Document History

Document Title: Solar Powered Smart Street Lamp

Document Number: AN-1151

Revision	Orig. of Change	Submission Date	Description of Change
A	Ameer Hamza Khan	02/03/2017	New application note

Worldwide Sales and Design Support

Silego Technology maintains a worldwide network of offices, solution centers, manufacturer's representatives, and distributors. To find the sales person closest to you, visit us at **Sales Representatives and Distributors.**

About Silego Technology

Silego Technology, Inc. is a fabless semiconductor company headquartered in Santa Clara, California, with operations in Taiwan, and additional design/technology centers in China, Korea and Ukraine.

Silego Technology Inc.
1515 Wyatt Drive
Santa Clara, CA 95054

Phone: 408-327-8800
Fax: 408-988-3800
Website: www.silego.com